บริษัท เอดีดี เฟอร์เนส จำกัด
Add Furnace Co.,Ltd.
44 ซ.บรมราชชนนี 70 ถ.บรมราชชนนี ศาลาธรรมสพน์ ทวีวัฒนา กทม. 10170.
website: https://www.add-furnace.com/ โทร: 02-888-3472
Line ID: @add11 e-mail: add028883472@gmail.com

Pressure regulator
FRS

DUNGS®
Combustion Controls

Technical description

The DUNGS pressure regulator, type FRS, has an adjustable setpoint spring. The pressure regulator complies with EN 88-1 and DIN 3380:

- Input pressures up to 500 mbar (50 kPa)
- High flow rate
- Sturdy, precise and sensitive regulation of regulator output pressure
- Inlet pressure compensation diaphragms
- Safety diaphragms
- Internal pulse for regulator output pressure as standard, optional external pulse connection optional on both sides
- Rp 3/8 to Rp 2 thread connection
- DN 40 to DN 150 flange connection

Application

Gas pressure regulator for gas burners and gas equipment. It does not contain any non-ferrous metals, suitable for gases of up to max. 0.1 vol.% H_2S, dry. Suitable for gases of families 1, 2, 3 and other neutral gaseous media.

Approval

EC type testing certificate as per:
• EC-Gas Appliances Regulation
Approvals in other important gas consuming countries.

Printed in Germany • Edition 01.18 • Nr. 214 743

บริษัท เอดีดี เฟอร์เนส จำกัด
Add Furnace Co.,Ltd.
44 ซ.บรมราชชนนี 70 ถ.บรมราชชนนี ศาลาธรรมสพน์ ทวีวัฒนา กทม. 10170.
website: https://www.add-furnace.com/ โทร: 02-888-3472
Line ID: @add11 e-mail: add028883472@gmail.com

FRS Spring-loaded pressure regulator with adjustable setpoint spring. Internal tap of regulator output pressure. External pulse connections optional, suitable for controlling regulator output pressure.

Specifications

Nominal diameters Pipe thread as per ISO 7/1 Flange	DN 40 50 65 80 100 125 150 Rp 3/8 1/2 3/4 1 1 1/2 2 2 1/2 Connection flange (PN 16) as per DIN EN 1092-1
Max. operating pressure	up to 500 mbar (50 kPa)
Pressure regulator	Pressure regulator as per EN 88-1, Class A, Group 2, DIN 3380, RG 10
Input pressure range	+ 5 mbar or p2 +2.5 mbar up to 500 mbar
Output pressure range	2.5 mbar to 200 mbar as a factor of adjustable setpoint spring
Materials of gas-conveying parts	Housing: aluminium, steel Seals and diaphragms: NBR
Ambient temperature	-15 °C to + 70 °C
Installation position	Regulator dome from vertically upright to lying horizontally
Measuring/ignition gas connections	G 1/4 ISO 228 on both sides in inlet section
Pulse connection	Internal in outlet section, Optional: external on housing on both sides
Ventilation pipe	Ventilation pipe only required in special cases. Safety diaphragms are installed. Connection: G 1/4 ISO 228 to Rp 1; from Rp 1 1/2, DN 40: G 1/2 ISO 228

Pressure taps

1 Breathing plug, ventilation pipe.

2 Connection for external pulse G 1/4 ISO 228 screw plug on both sides, **optional**

3 G 1/4 ISO 228 screw plug in input section on both sides

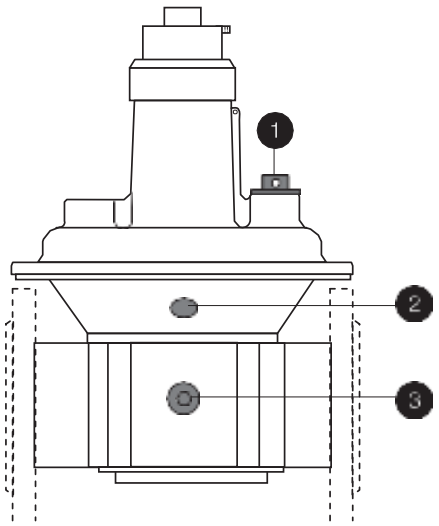

บริษัท เอดีดี เฟอร์เนส จำกัด
Add Furnace Co.,Ltd.
44 ซ.บรมราชชนนี 70 ถ.บรมราชชนนี ศาลาธรรมสพน์ ทวีวัฒนา กทม. 10170.
website: https://www.add-furnace.com/ โทร: 02-888-3472
Line ID: @add11 e-mail: add028883472@gmail.com

Spring selection

The output pressure is provided by the force of the installed adjustable spring and the force due to weight of the moving parts. The pressure regulator is equipped with the blue spring No. 4 as standard. By exchanging the adjustable spring, other output pressures can be adjusted.

Setpoint spring range [mbar]	2,5…9	5…13	5…20	10…30	25…55	30…70	60…110	100…150	140…200
Spring colour	Spring 1 brown	Spring 2 white	Spring 3 orange	Spring 4 blue	Spring 5 red	Spring 6 yellow	Spring 7 black	Spring 8 pink	Spring 9 grey
Nominal width Rp/DN									
Rp 3/8, Rp 1/2	229 817	229 818	229 820	229 821	229 822	229 823	229 824	229 825	229 826
Rp 3/4	229 833	229 834	229 835	229 836	229 837	229 838	229 839	229 840	229 841
Rp 1	229 842	229 843	229 844	229 845	229 846	229 847	229 848	229 849	229 850
Rp 1 1/2, DN 40	229 851	229 852	229 853	229 854	229 869	229 870	229 871	229 872	229 873
Rp 2, DN 50	229 874	229 875	229 876	229 877	229 878	229 879	229 880	229 881	229 882
Rp 2 1/2, DN 65, 80	229 883	229 884	229 885	229 886	229 887	229 888	229 889	229 890	229 891
DN 100	229 892	229 893	229 894	229 895	229 896	229 897	229 898	229 899	229 900
DN 125	229 901	229 902	229 903	229 904	229 905	229 906	229 907	229 908	243 416
DN 150	229 909	229 910	229 911	229 912	229 913	229 914	229 915	229 916	243 417

Dimensions

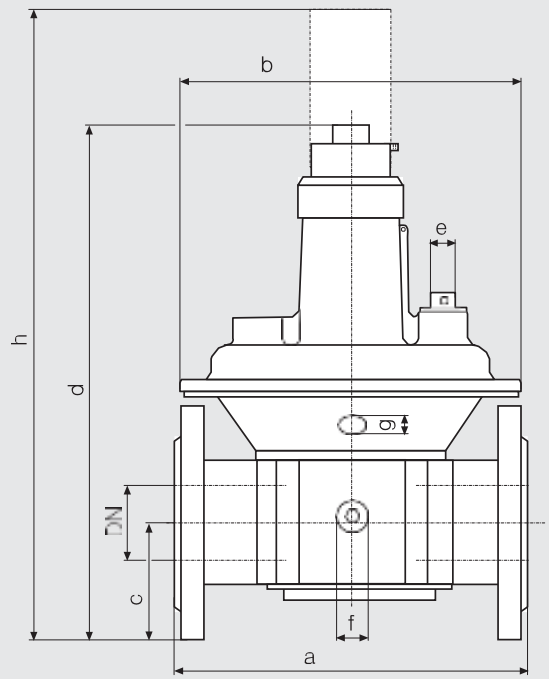

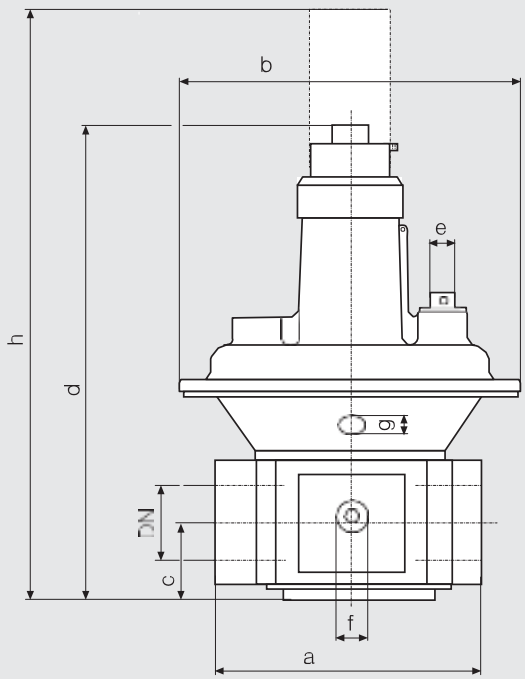

Type	Order No. Internal pulse	Order No. External pulse	$p_{max.}$ [mbar]	Rp / DN	Dimensions [mm] a	b	c	d	e	f	g	h	Weight [kg]
FRS 503	086 462	220 998	**500**	Rp 3/8	77	115	24	143	G 1/4	G 1/4	G 1/8	225	0.60
FRS 505	070 383	211 817	**500**	Rp 1/2	77	115	24	143	G 1/4	G 1/4	G 1/8	225	0.60
FRS 507	070 391	220 999	**500**	Rp 3/4	100	130	28	165	G 1/4	G 1/4	G 1/8	245	1.00
FRS 510	070 409	210 381	**500**	Rp 1	110	145	33	190	G 1/4	G 1/4	G 1/8	310	1.20
FRS 515	058 446	221 000	**500**	Rp 1 1/2	150	195	40	250	G 1/2	G 1/4	G 1/4	365	2.50
FRS 520	058 628	208 237	**500**	Rp 2	170	250	47	310	G 1/2	G 1/4	G 1/4	450	3.50
FRS 525	083 303		**500**	Rp 2 1/2	230	285	60	365	G 1/2	G 1/4	G 1/4	550	6.00
FRS 5040	065 144	214 474	**500**	DN 40	200	195	62.5	280	G 1/2	G 1/4	G 1/4	395	3.50
FRS 5050	065 151	183 600	**500**	DN 50	230	250	73	340	G 1/2	G 1/4	G 1/4	480	5.00
FRS 5065	058 792	183 930	**500**	DN 65	290	285	93	405	G 1/2	G 1/4	G 1/4	590	7.50
FRS 5080	079 681	183 940	**500**	DN 80	310	285	90	405	G 1/2	G 1/4	G 1/4	590	10.00
FRS 5100	082 552	211 019	**500**	DN 100	350	350	100	495	G 1/2	G 1/4	G 1/4	760	16.00
FRS 5125	013 250	208 301	**500**	DN 125	400	400	125	635	G 1/2	G 1/4	G 1/4	1000	28.00
FRS 5150	013 268	208 302	**500**	DN 150	480	480	142.5	780	G 1/2	G 1/4	G 1/4	1180	38.00

บริษัท เอดีดี เฟอร์เนส จำกัด
Add Furnace Co.,Ltd.
44 ซ.บรมราชชนนี 70 ถ.บรมราชชนนี ศาลาธรรมสพน์ ทวีวัฒนา กทม. 10170.
website: https://www.add-furnace.com/ โทร: 02-888-3472
Line ID: @add11 e-mail: add028883472@gmail.com

Functional description

Functions according to the force comparison principle between the force of:

- the adjustable setpoint spring
- the differential pressure at the working diaphragm
- the force due to weight of the moving parts

The adjustable spring acts with the force due to weight of the moving parts. The output pressure is adjusted depending on the pretension of the adjustable spring and the installation position.

Instructions

Gas-conveying lines, pulse and connection lines must be made of steel and at least PN 1, DN 6. The lines must be resistant to thermal, chemical and mechanical loads. The lines must be durable and resistant to deformation and cracks.

⚠ Do not route condensate from lines into the pressure regulator.
Protect the pressure regulator from fouling by means of a suitable dirt trap.

⚠ Do not apply combustion gas or combustion gas air mixtures to the installation chamber of the adjustable spring.

FRS 515 sectional drawing
Pressure regulator in operating position

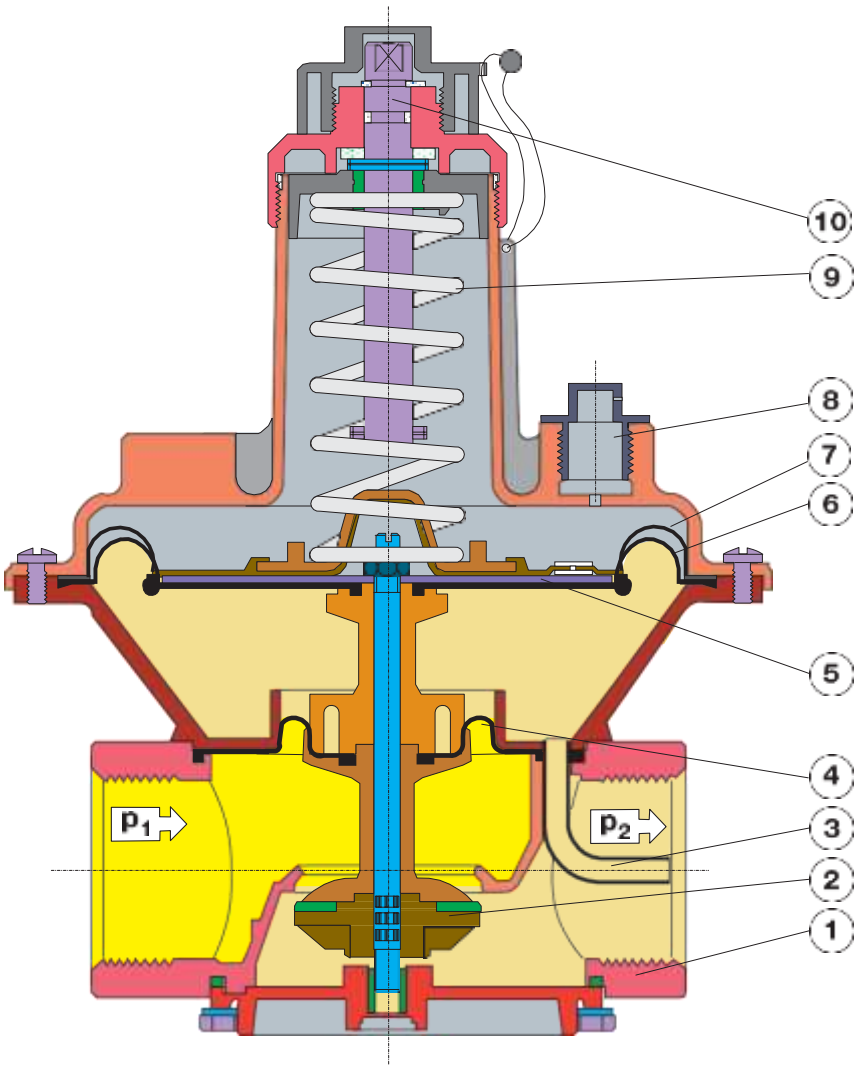

1	Housing	4	Compensation diaphragm	7	Safety diaphragm
2	Regulating cup	5	Diaphragm disk	8	Breathing plug
3	Pulse tap, internal	6	Working diaphragm	9	Setpoint spring
				10	Adjustment device

บริษัท เอดีดี เฟอร์เนส จำกัด
Add Furnace Co.,Ltd.
44 ซ.บรมราชชนนี 70 ถ.บรมราชชนนี ศาลาธรรมสพน์ ทวีวัฒนา กทม. 10170.
website: https://www.add-furnace.com/ โทร: 02-888-3472
Line ID: @add11 e-mail: add028883472@gmail.com

Equipment preselection, blocked pressure regulators

You can **preselect** the nominal diameter using the volumetric flow pressure drop characteristic of the pressure regulators in mechanically open state. The pressure drop between input pressure p_1 and regulator output pressure p_2 in connection with the maximum volumetric flow V_{max} determine the nominal width of the pressure regulator. The operating point described by Δp_{min} and V_{max} is left of the nominal width of the pressure regulator to be selected.

The pressure drop over **blocked pressure regulators** is described by the "mechanically open" characteristic. The final determination is performed according to the dimension specified by the gas appliance manufacturer.

Volumetric flow pressure drop characteristic
mechanically open

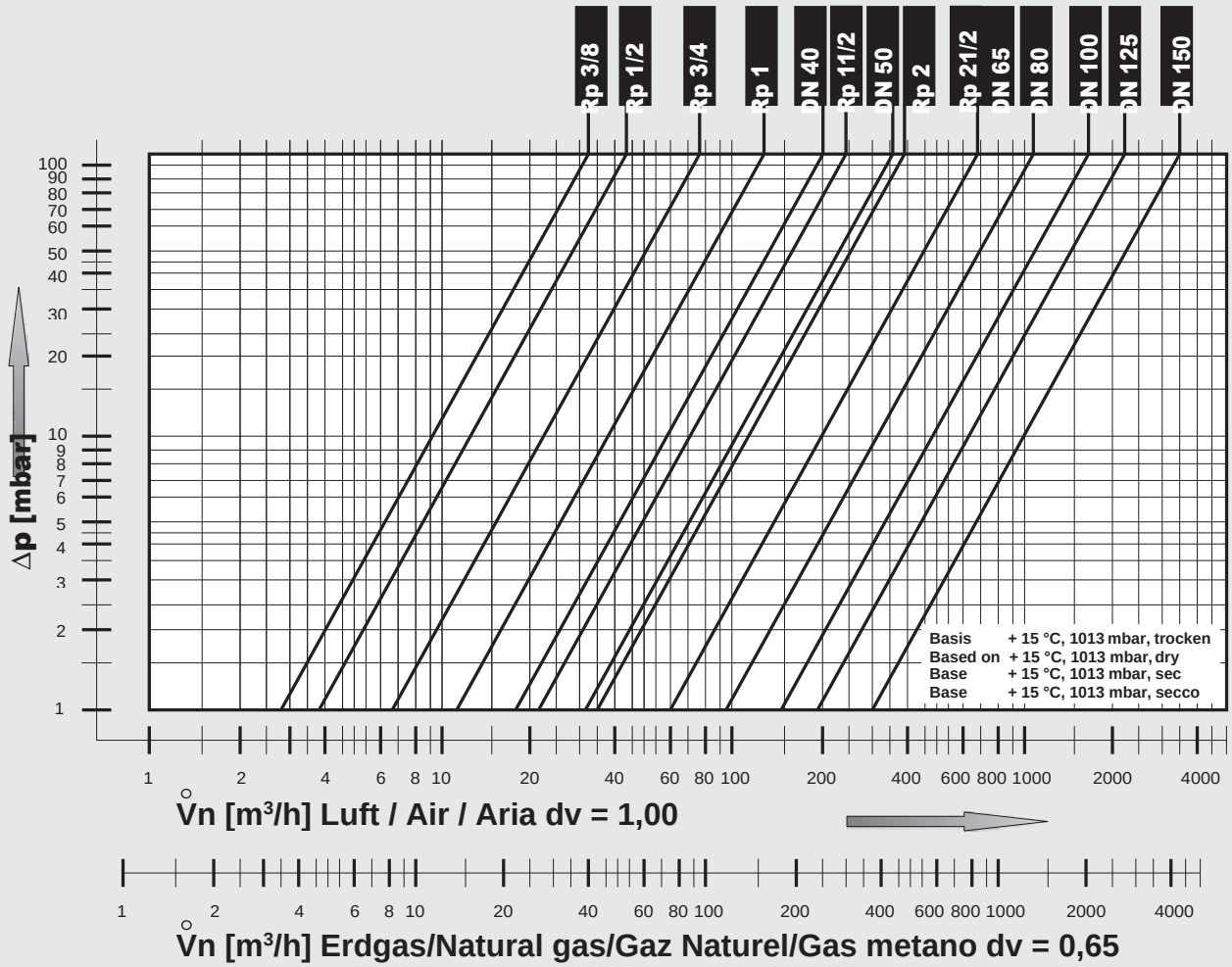

$$\mathring{V}_{\text{verwendetes Gas/gas used/ gaz utilisé/gas utilizzato}} = \mathring{V}_{\text{Luft/air/air/aria}} \times f$$

$$f = \sqrt{\frac{\text{Dichte Luft / Air density / Densité de l'air / Densità dell'aria}}{\text{spez. Gweicht des verwendeten Gases / Spec. weight of gas used / poids spécifique du gaz utilisé / peso specifico del gas utilizzato}}}$$

Gasart Type of gas Type de gaz Tipo di gas	Dichte Density Densité Densità [kg/m³]	dv	f
Erdgas/Nat.Gas/ Gaz naturel/Gas metano	0.81	0.65	1.24
Gaz de ville/Gas città			
Stadtgas/City gas/ Gaz de ville/Gas città	0.58	0.47	1.46
Flüssiggas/LPG/ Air/Aria	2.08	1.67	0.77
Luft/Air/	1.24	1.00	1.00

บริษัท เอดีดี เฟอร์เนส จำกัด
Add Furnace Co.,Ltd.
44 ซ.บรมราชชนนี 70 ถ.บรมราชชนนี ศาลาธรรมสพน์ ทวีวัฒนา กทม. 10170.
website: https://www.add-furnace.com/ โทร: 02-888-3472
Line ID: @add11 e-mail: add028883472@gmail.com

Pressure regulator
FRS

DUNGS®
Combustion Controls

$V_{min} = 0{,}05 \times V_{max}$

Flow diagram in regulated state, where p_2 = 20 mbar

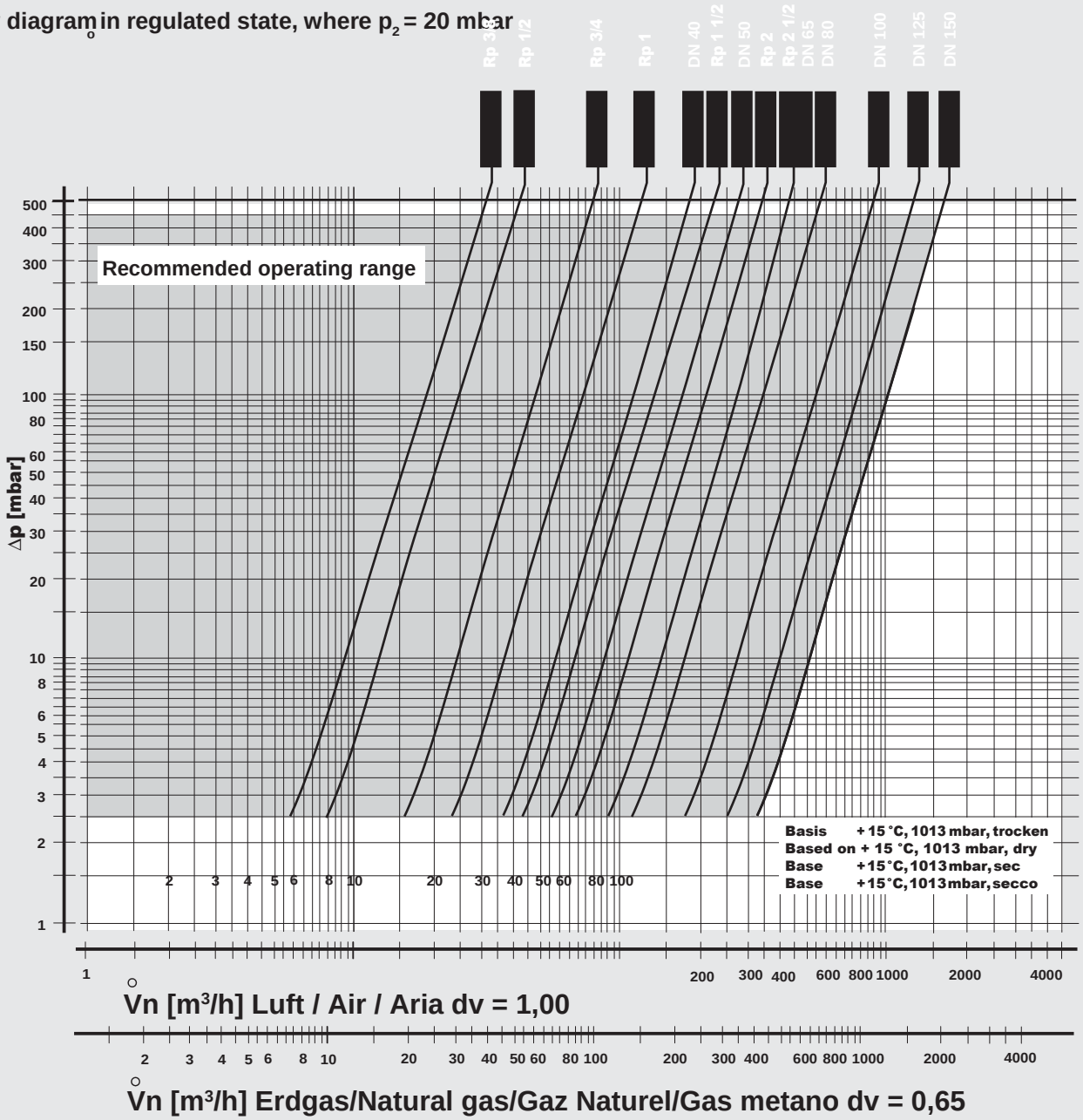

We reserve the right to make any changes in the interest of technical progress.